SALES DRAWING SALES DRAWING SALES DRAWING

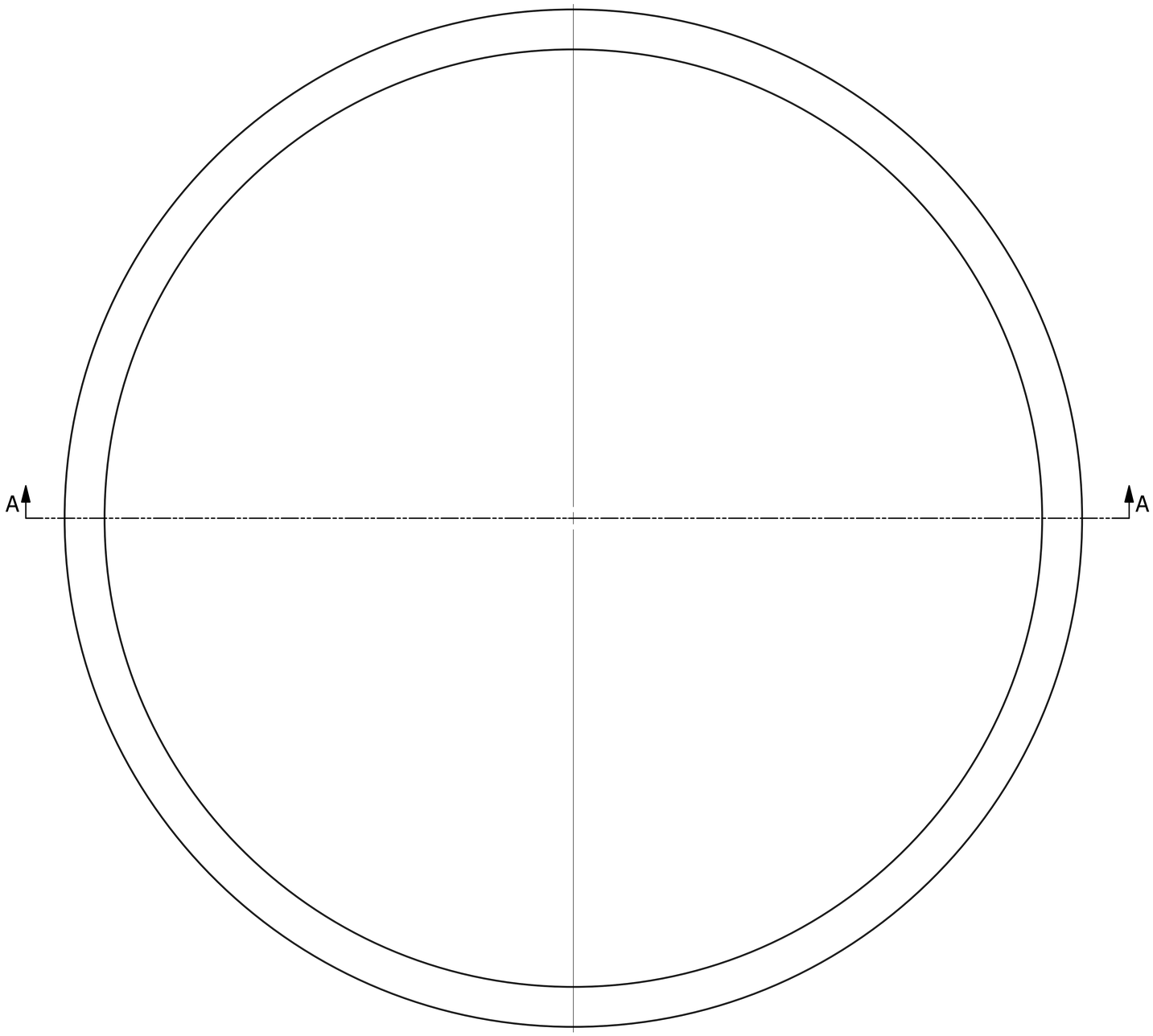

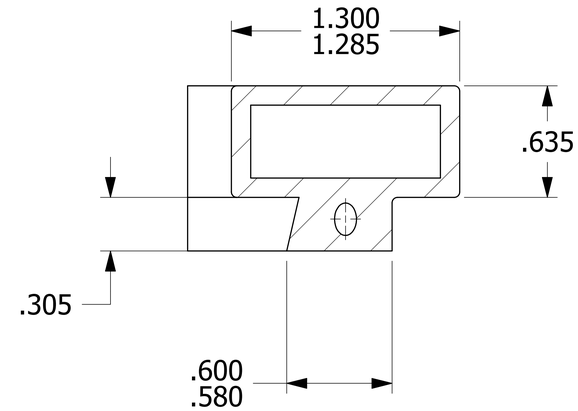

DETAIL B

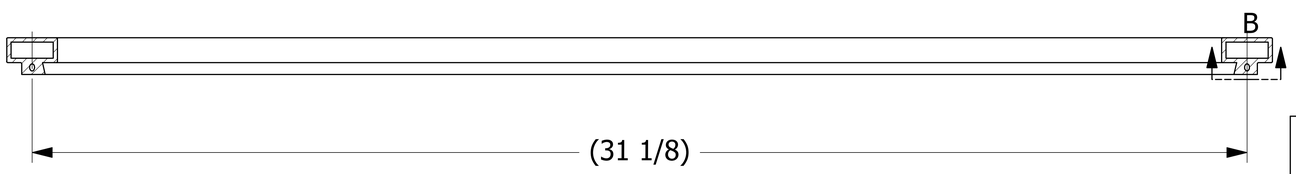

SECTION A-A

REV	BY	DATE	REF #	PUB
E	CHL	2/24/21	202102241459	CHL

UNLESS OTHERWISE SPECIFIED DIMENSIONAL TOLERANCES

FRACTIONAL: ±1/16
X.XX: ±.03
X.XXX: ±.015
ANGULAR: ±1°

DEBURR ALL SHARP EDGES. ALL MACHINED SURFACES TO HAVE A 125 RMS FINISH UNLESS NOTED OTHERWISE.

THIRD ANGLE PROJECTION

DRAWN BY:	BRW
CHECKED BY:	ACC
PROTOTYPE DATE:	2/24/2021
APPROVED FOR PRODUCTION BY:	BRW
PRODUCTION DATE:	1/6/1995
SIZE:	E
DRAWING #:	5375

SALCO PRODUCTS, INC.

PART NAME: HATCH COVER GASKET 30"

MATERIAL: WHITE FDA VINYL DURO. 80 SHORE A

PROJECT #:

SHEET #: 1 OF 1

SCALE: 2:3

PART #: HCG30E

THIS PRINT, PROPERTY OF SALCO PRODUCTS INC, CONTAINS PROPRIETARY INFORMATION AND MUST NOT BE COPIED, REPRODUCED, OR USED DETRIMENTALLY TO OUR INTEREST.